Hydrogen flowmeter for mass flow rates of 0.008...108 g/s displaying flow rate, static pressure and temperature

HOH2 Hydrogen Flowmeter

- **Unique, all-in-one testing, flow rate, static pressure and temperature measuring unit for hydrogen applications**
- **5 to 10:1 turndown ratio**
- **Very low pressure drop**
- **Mono-Block flow meter body design - no welding**
- **≤1.0% accuracy**
- **Readings accessible via built in display**
- **Working pressures up to 1000 bar**
- **Easy to operate**
- **NPT or autoclave threaded connections**
- **R139 approval pending**
- **Self-conditioning flow - no long pipe runs**
- **No moving parts - low maintenance design**
- **316L Stainless Steel body as standard**
- **Available as separate parts (without frame)**

A cutting-edge flow meter designed specifically for use with hydrogen but also available for other gases such as nitrogen, air or natural gas on request. Flow rate, static pressure and temperature values are accessible via the built-in display and, optionally, via the built-in Modbus connection.

Electrolysers

Custody transfer

Hydrogen storage systems

DISCOVER MORE AT HYDROTECHNIK.CO.UK/HOH2

DESCRIPTION

This state-of-the-art, superb quality flow meter can measure flow rates from 0.008g/s up to 108g/s. For flow rates above 108g/s, please see the HCH2 Hydrogen Flowmeter, which is compatible with flow rates between 0.1…541 g/s (0.36…1947.6 kg/h).

An internal flow computer uses an algorithm based on differential pressure between 2 points in the flow meter body, static pressure and temperature to calculate the flow rate in g/s or kg/hr.

The built-in display shows this calculated flow rate, static pressure (bar) or temperature (°C). The included Modbus output also makes flow, pressure and temperature values available externally, with the flow rate also available via a 4…20mA output.

In tank loading applications the pressure drop across HOH2 flow meters is significantly less compared to other technologies by up to 20 to 30 times. This creates a much lower temperature rise in the hydrogen in these circumstances meaning loading can take place at higher flow rates for longer, drastically cutting the loading time and increasing throughput.

FLOW METER FEATURES

1. Robust stainless steel enclosure
2. Differential pressure sensor and display; required for flow rate calculation
3. Flow computer and display
4. Cable gland providing Modbus and 4…20mA outputs
5. Mono-Block, weld-free flow meter body with NPT or Autoclave threaded connections
6. Differential and static pressure sensors
7. Rear access temperature sensor

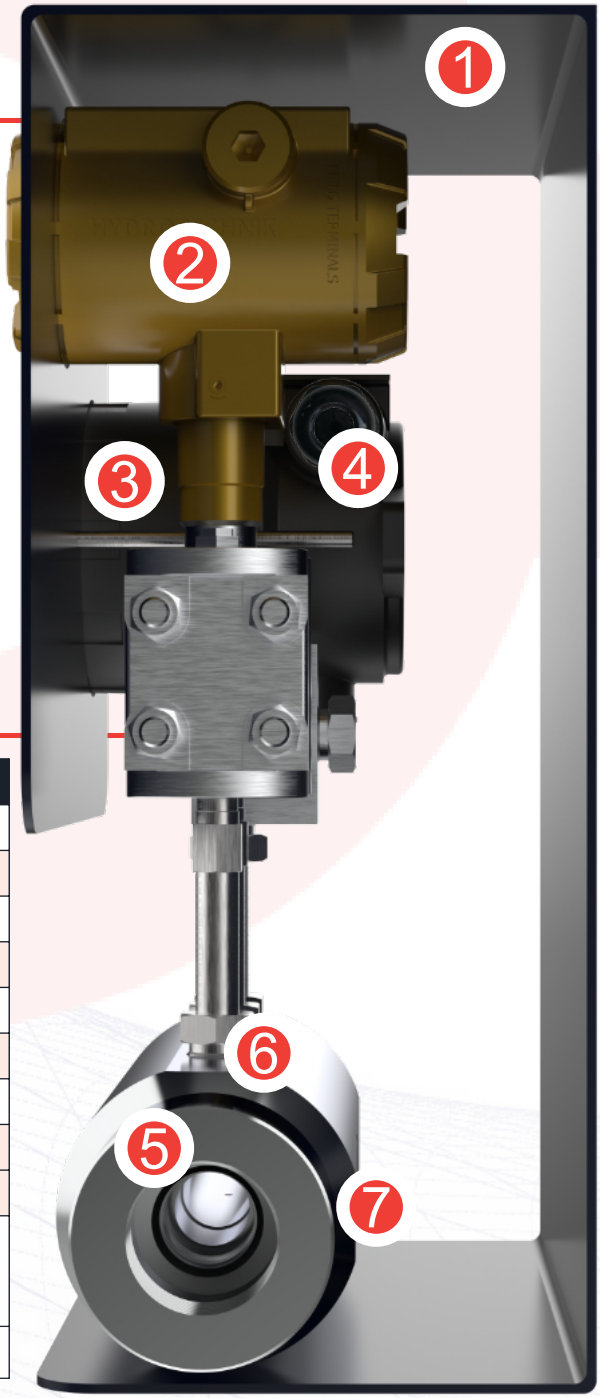

TECHNICAL DATA

DETAIL	SPECIFICATION	
Power	24 VDC	
Maximum flow rate	See ordering information	
Max pressure	1000 bar (see ordering information)	
Dimensions	See technical drawing	
Weight	**TBC**	
Flow meter body	316L stainless steel, weld-free mono-block design	
Turndown ratio	5 to 10:1 (depending on accuracy requirements)	
ATEX approval	Optional for individual components	
R139 approval	*Pending*	
Output signals	Modbus	• Flow rate • Static pressure • Temperature
	4…20mA	• Flow rate

TECHNICAL DRAWING

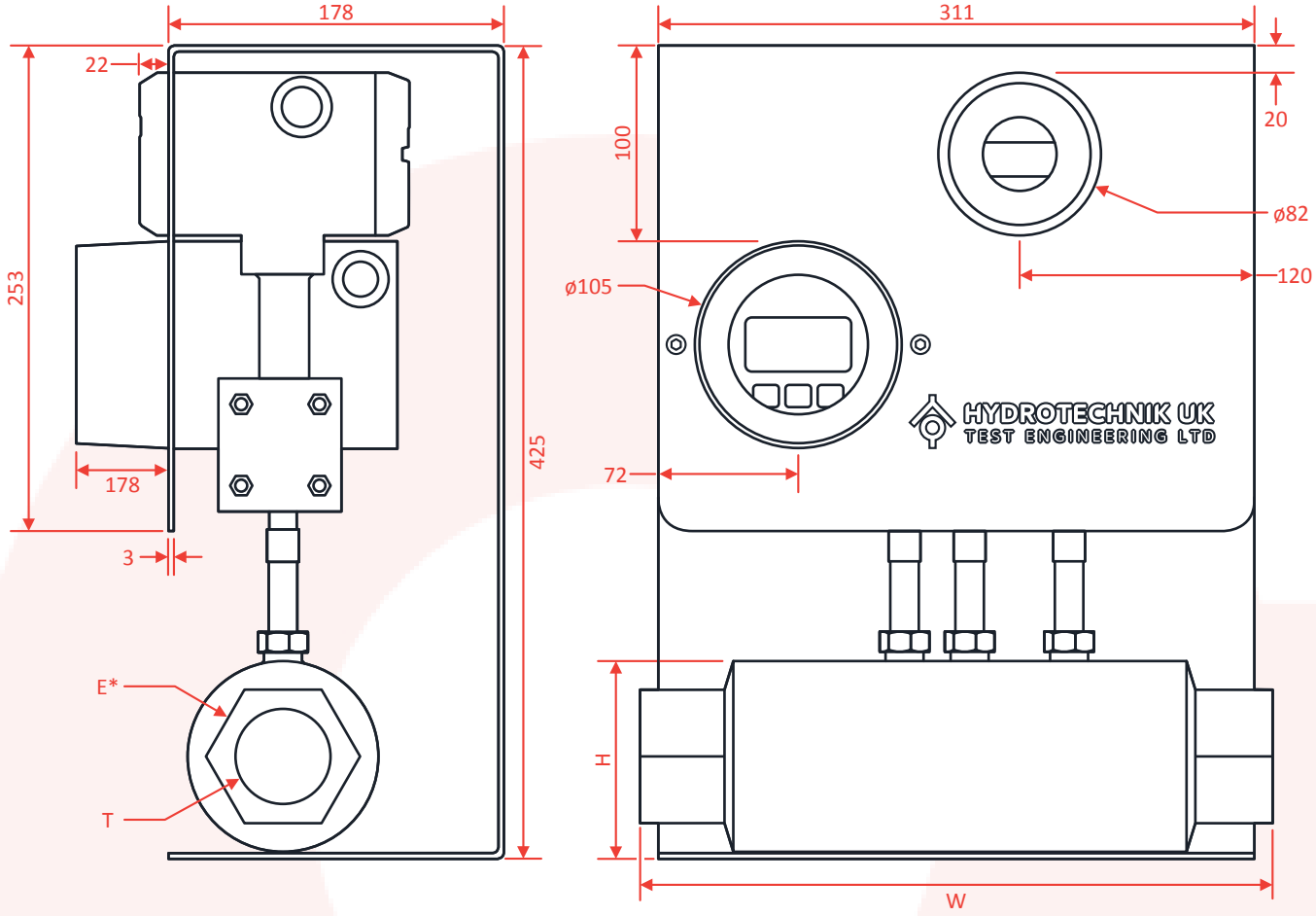

All dimensions in mm, drawing not to scale.
For flow meter width (W), height (H), end (E) and thread (T) see flow meter body section.
**End (E) is machined round for working pressures ≤320 bar and as a hex for pressures >320 bar. See flow meter body section for details.*

FLOW METER BODY

*Option code***	*W (mm)*	*H (mm)*	*E (mm)*	*T*
01-07 & 15-21	175	48	40 Round	3/4" x 14 TPI NPT Fem
	220	62	54 AF Hex	1" MP Autoclave
08-14 & 22-28	315	72	58 Round	1 1/4" NPT 11.5 TPI
	374	96	70 AF Hex	1 ½" MP Autoclave

***28 models are available, represented using option codes 01 to 28.*
Please see the Ordering Code section to determine which option you require, based on your flow rate and working pressure.

MAXIMUM WORKING PRESSURE

The ordering tables on the next page use average system pressure alongside minimum and maximum flow rates. Please refer to the following table to determine the maximum working pressure possible in each case. For more information please contact us.

Working Pressure (Bar)	5	10	25	50	75	100	250	500	750	1000
Max pressure (Bar)	10	16	40	60	100	125	300	600	800	1035

ORDERING CODE

1 2 3

HOH2-XX-YY-ZZZZ-020*

Please replace XX, YY and ZZZZ in the above format to generate your order code.

1. Replace **XX** with **X1** if you require *ATEX Exd IIC Gb approval*, or use **XX** for *no approval*.
2. Using the first table below for g/sec, or the second for kg/hour, find your desired working pressure in the first column. Then find your desired flow rate (min/max) on that same row. Replace **YY** with the 2-digit code from the bottom of the column containing your flow rate.
3. Replace **ZZZZ** with your desired working pressure, for example **0010** for *10 bar* or **1000** for *1000 bar*.

For example, if you require *no ATEX approval* (**XX**), have a working pressure of *10 Bar* (**0010**), a flow rate within *0.72…6.12 kg/hour* (**19**) your order code would be:
HOH2-XX-19-0010-020.

Please contact us if you have flow rates or pressures not mentioned below.
**Note that the above flow rate tables are based on a hydrogen temperature of 20°C. For other temperature ranges please contact us.*

Pressure	Minimum / Maximum Flow Rates (g/sec)									
5 Bar	Min	0.003	0.011	0.026	0.052	0.02	0.03	0.5	0.7	0.9
(72.5 PSIG)	Max	0.02	0.1	0.23	0.44	0.2	0.3	0.04	0.06	0.08
10 Bar	Min	0.008	0.031	0.072	0.141	0.07	0.1	0.15	0.22	0.3
(145 PSIG)	Max	0.07	0.29	0.68	1.31	0.9	1.4	2	2.8	3.9
25 Bar	Min	0.012	0.047	0.108	0.211	0.12	0.18	0.27	0.38	0.53
(363 PSIG)	Max	0.11	0.45	1.04	2	1.6	2.5	3.7	5.2	7.1
50 Bar	Min	0.045	0.178	0.412	0.798	0.7	1.1	1.6	2.3	3.2
(725 PSIG)	Max	0.22	0.88	2.03	3.91	3.5	5.5	8.1	11.35	15.6
75 Bar	Min	0.054	0.215	0.498	0.964	0.85	1.3	1.98	2.8	3.8
(1088 PSIG)	Max	0.37	1.5	347	6.68	5.98	9.4	13.8	19.4	26.6
100 Bar	Min	0.062	0.25	0.57	1.1	0.98	1.5	2.3	3.2	4.4
(1450 PSIG)	Max	0.61	2.42	5.59	10.77	6.8	10.8	15.8	22.2	30.5
250 Bar	Min	0.093	0.37	0.86	1.65	1.5	2.3	3.4	4.8	6.6
(3626 PSIG)	Max	0.91	3.66	8.45	16.26	14.6	22.99	33.7	47.3	64.9
500 Bar	Min	0.12	0.49	1.13	2.18	1.9	3.1	4.5	6.3	8.7
(7252 PSIG)	Max	1.21	4.83	11.15	21.46	19.3	30.4	44.5	62.5	85.6
750 Bar	Min	0.14	0.56	1.3	2.51	2.2	3.5	5.2	7.3	9.98
(10878 PSIG)	Max	1.39	5.57	12.87	24.75	22.2	35.03	51.3	72.1	98.8
1000 Bar	Min	0.15	0.62	1.42	2.75	2.4	3.9	5.7	7.95	10.9
(14504 PSIG)	Max	1.53	6.1	14.1	27.12	24.4	38.4	56.3	78.96	108.2
Replace YY with code:		01	02	03	04	05	06	07	08	09

Pressure	Minimum / Maximum Flow Rates (kg/hour)									
5 Bar	Min	0.01	0.04	0.09	0.19	0.06	0.1	0.15	0.21	0.29
(72.5 PSIG)	Max	0.09	0.36	0.82	1.6	0.8	1.2	1.7	2.5	3.4
10 Bar	Min	0.03	0.11	0.26	0.51	0.2	0.37	0.55	0.8	1.1
(145 PSIG)	Max	0.27	1.06	2.44	4.72	3.1	4.97	7.3	10.2	14.1
25 Bar	Min	0.04	0.17	0.39	0.76	0.4	0.7	0.98	1.4	1.9
(363 PSIG)	Max	0.4	1.61	3.73	7.21	5.7	9.1	13.3	18.7	25.7
50 Bar	Min	0.16	0.64	1.48	2.87	2.5	4.01	5.9	8.3	11.4
(725 PSIG)	Max	0.79	3.16	7.3	14.1	12.6	19.8	29.1	40.9	56.1
75 Bar	Min	0.19	0.78	1.79	3.47	3.1	4.8	7.1	10.01	13.8
(1088 PSIG)	Max	1.35	5.4	12.5	24.04	21.5	33.9	49.7	69.8	95.8
100 Bar	Min	0.22	0.89	2.05	8.78	3.5	5.5	8.1	11.4	15.7
(1450 PSIG)	Max	2.2	8.7	20.1	38.8	24.6	38.8	56.9	79.9	109.6
250 Bar	Min	0.33	1.3	3.1	5.95	5.3	8.3	12.2	17.2	23.6
(3626 PSIG)	Max	3.3	13.2	30.4	58.5	52.5	82.8	121.3	170.3	233.5
500 Bar	Min	0.4	1.8	4.1	7.8	6.98	11	16.1	22.7	31.2
(7252 PSIG)	Max	4.3	17.4	40.2	77.3	69.4	109.3	160.2	224.9	308.3
750 Bar	Min	0.51	2.02	4.67	9.03	8.04	12.7	18.6	26.1	35.9
(10878 PSIG)	Max	5.01	20.05	46.32	89.11	80.01	126.1	184.9	259.4	355.6
1000 Bar	Min	0.55	2.21	5.12	9.88	8.8	13.9	20.4	28.6	39.3
(14504 PSIG)	Max	5.49	21.98	50.75	97.63	87.7	138.2	202.6	284.2	389.7
Replace YY with code:		15	16	17	18	19	20	21	22	23