HYDROTECHNIK
MESSEN MIT SYSTEM

SEG 1060

Schalttafel-Einbaugerät
Switchboard Build-in Device
Afficheur encastrable multifonction
Apparecchio da incasso a pannello elettrico

Bedienungsanleitung
Instructions for Use
Mode d'emploi
Istruzioni d'uso

L3192-04-00.00
Version 1.2/2010-02-03

Switchboard Build-in Device

Instructions for Use • Version 1.2 2010-02-03

English

Contents

English

1 Important Safety Information

Please take note of the Safety Advice and Warning Hints contained on the information sheet (document no. L 8898-00-00.01) that is part of these Instructions for Use and delivered with the device.

2 Introduction

This section contains information on various legal questions. Please read all parts of this section in order to be fully aware of your rights.

2.1 Validity

The following Intructions for Use are valid for “SEG 1060” display, monitoring and control equipment supplied by Hydrotechnik GmbH. They are intended for the user of the equipment – that means, the person that handles and works with the equipment.

This is not a technical handbook. Our Customer Service Dept. will be pleased to answer any questions exceeding the contents of this manual.

2.2 Use as agreed

The "SEG 1060" is a universally applicable, microprocessor-controlled display, monitoring and control device. It is equipped with a universal input, as well as a switched and an analogue output. All the possible input signals and switching functions are defined within the technical data.

Any application of this equipment which deviates from this definition and/ or the restrictions contained within the technical data, is not deemed to be an “Use as agreed”.

If you have questions, or wish to use the equipment for any other purpose, please contact our Customer Service Dept.. We will be pleased to help you with possible configurations.

English

3 Description of the Instrument

3.1 Controls and indicators

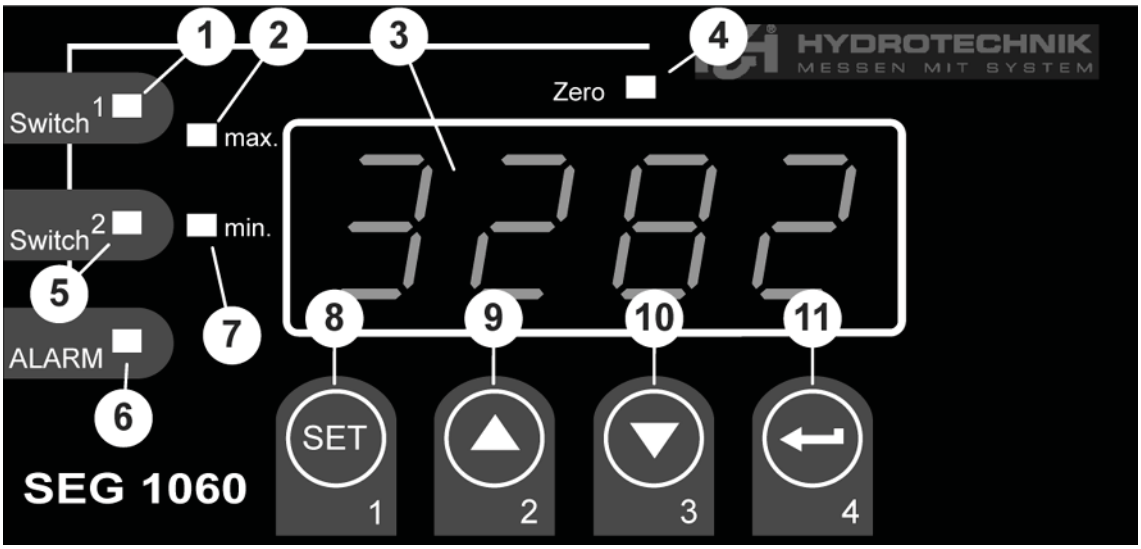

1 Control lamp output (not supported)
2 Maximum value indicator
3 Display
4 Control lamp calibration
5 Control lamp output
6 Control lamp alarm
7 Minimum value indicator
8 Key 1 „Set“ SET
9 Key 2 „Arrow up“ ▲
10 Key 3 „Arrow down“ ▼
11 Key 4 „Enter“ ↵

English

3.2 Pin assignment

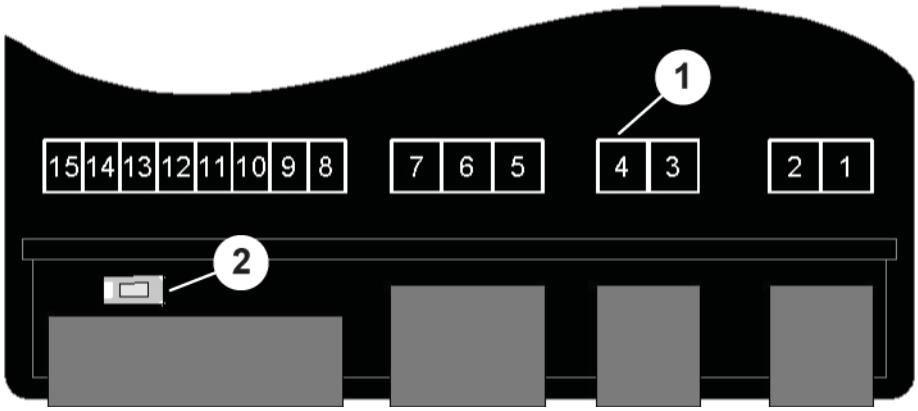

1 Connectors (see table below)
2 Key 5 „Programming“

Assignment of the connectors

1 Supply voltage*
2 Supply voltage*
3 Analog output (–)
4 Analog output (+)
5 Relais, input*
6 Relais, NO switch*
7 Relais, NC switch*
8 Transmitter supply voltage (+)
9 Transmitter supply voltage (–)
10 GND
11 – (not used)
12 Input: mA, frequency
13 Input: 0 – 10 V
14 – (not used)
15 – (not used)
*: 230 VAC or 24 VDC according to the product label

4 Delivery • Unpacking • Putting into operation

4.1 Checking the delivery

The instrument is despatched by Hydrotechnik and delivered by a Logistics Company, usually a Parcels Service. At the time of delivery, please check the following:

- Is the number of packages sent by Hydrotechnik and deliverd by the Logistics Company identical?
- Is there any damage to the package(s)?
- Is there any damage to the Instument and/or the Accessories?
- Is there any evidence of bad handling practice during the transport (e.g.: burn marks, scratches, paint or chemicals)?

To ensure that a claim can be made against the delivery company if necessary, a written description of the damage, plus photos if possible, should be made before unpacking the instrument.

Hydrotechnik is not responsible for any damage during transport and cannot accept liability for such damage.

4.2 Contents of the delivery

Remove the instrument carefully from the packaging (please oberve all the relevant laws and regulations regarding the disposal of the packing materials). After unpacking, check that two resistors (500 ohms and 4.7 kOhm) are present, as well as the intrument that you have ordered:

- SEG 1060, Display instrument 230 VAC 3192-04-20.00
- SEG 1060, Display instrument 230 VAC with GW and output 3192-04-21.00
- SEG 1060, Display instrument 24 VDC 3192-04-10.00
- SEG 1060, Display instrument 24 VDC with GW and output 3192-04-11.00

Check that the delivery agrees with the Delivery Note and your copy of the Order. Notify Hydrotechnik immediately if there are any discrepancies, as late complaints about a delivery cannot be accepted.

English

4.3 Connecting the instrument

Attention

Injury and/or damage can occur due to connection to an incorrect electrical supply!
This equipment should only be installed by qualified personnel. Qualified Personnel are defined as having completed professional training as an electrical engineer, or as having a comparable qualification. This removes the chance of faulty connections, which can lead to injuries to the operators and/or substantial damage.

Hint

Please read the pin assignment (section 3.2).

4.3.1 Connection data

	between connectors	Op. value		Limits		
		min	max	min	max	
Power supply (V_{AC})	1 2	207	244	0	253	*1
Power supply (V_{DC})	1 2	22,8	25,2	–	–	*1
Analog output 0–20 mA (Ω)	3 4	–	–	0	400	*2
Analog output 4–20 mA (Ω)	3 4	–	–	0	400	*2
Analog output 0–10 V (Ω)	3 4	–	–	1.000	∞	*2
Relais 1 (2-way)	5 6 7	–	–	–	*3	*1
Transmitter supply (mA)	8 9	0	20	0	25	–
Input mA (mA)	12 10	0	20	0	30	–
Input frequency (V)	12 10	0	3,3	-1	*4	–
Input 0–10 V (V)	13 10	0	10	-1	20	–

*1 according to information on product label
*2 no active signal allowed
*3 253 V_{AC}, 10 A ohmic load
*4 30 V |< 6 mA

Attention

Possible damage to the device!
The limits must not be exceeded under any circumstances (even for short periods), as damage to the equipment can occur.

4.3.2 Connect input signal

4-20 mA Measuring transducer in 2-wire technique

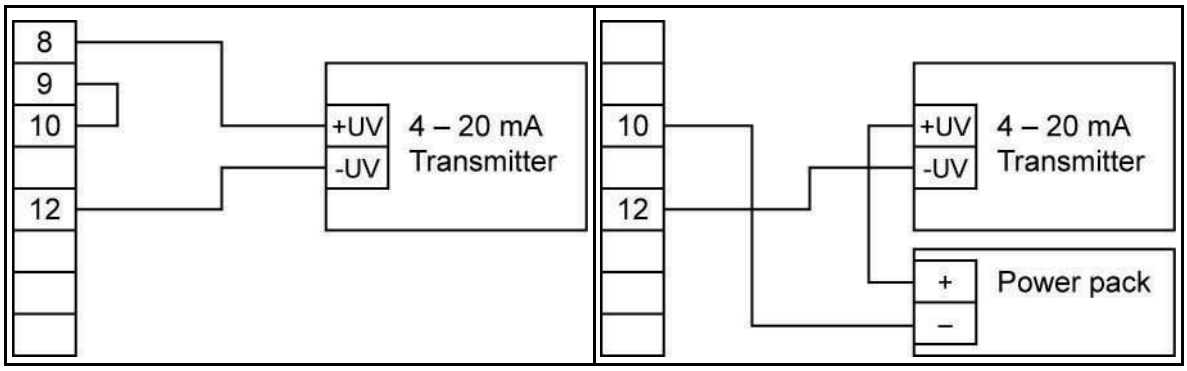

... transmitter supply integrated in the instrument

... separate transmitter supply

0(4)-20 mA Measuring transducer in 3-wire technique

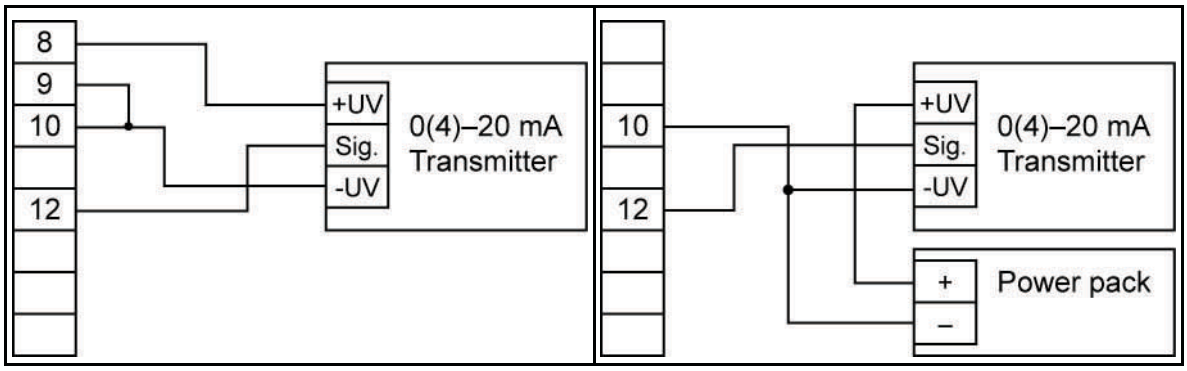

... transmitter supply integrated in the instrument

... separate transmitter supply

English

0-10 V Measuring transducer in 3-wire technique

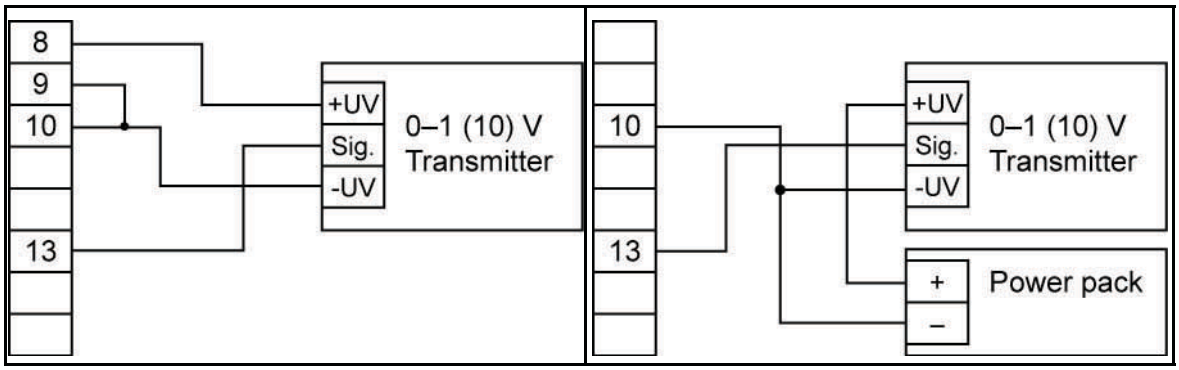

... transmitter supply integrated in the instrument

... separate transmitter supply

0-10 V Measuring transducer in 4-wire technique

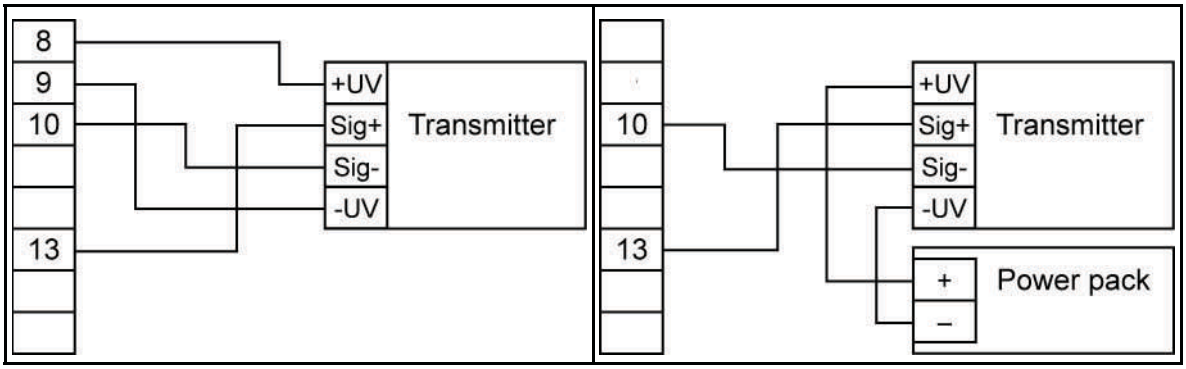

... transmitter supply integrated in the instrument

... separate transmitter supply

4.3.3 Connect frequency signal

You can connect a passive sensor with PNP (= +Ub switched PNP Output, High-side switch...).when measuring Frequency and Speed (rpm). When the configuration is "Switch Contact PNP" a Pull-down resistor (~7 kOhm against GND) is switched-on within the equipment. In this way, senders with PNP Output and Speed (rpm) can be used without need for an external resistor. During Frequency and Flow-volume measurements > 2kHz, the enclosed 4.7 KOhm resistor must be connected between pins 10 and 12.

Hint

Check to make make absolutely certain that the permissible input voltage and/or the permissible input current of the frequency input connection is not exceeded.

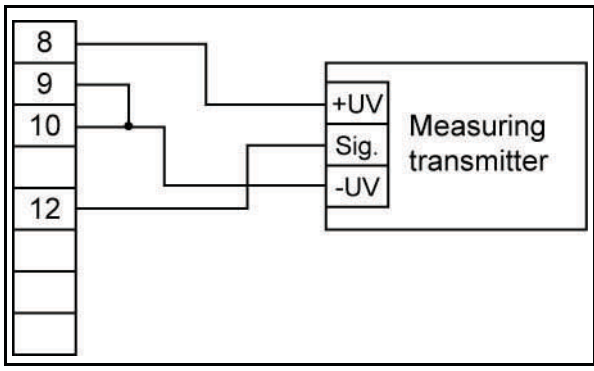

Connection of a transducer with integrated supply and TTL -, NPN- or PNP output

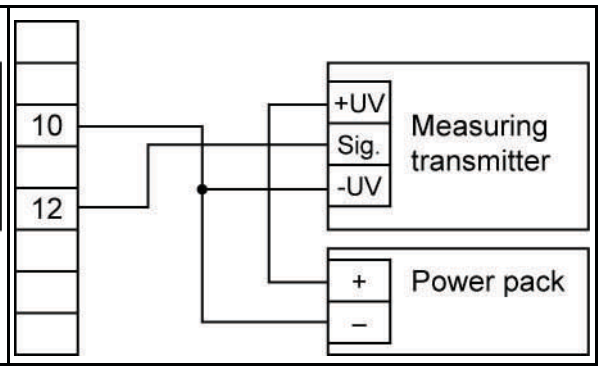

Connection of a transducer with separate supply and TTL-, NPN- or PNP-output

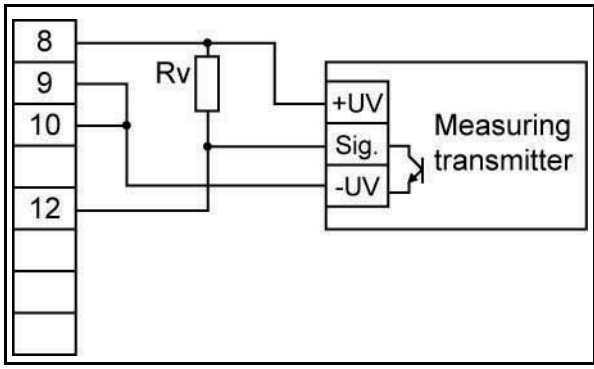

Connection of a transducer with integrated supply and NPN-output with required external resistor

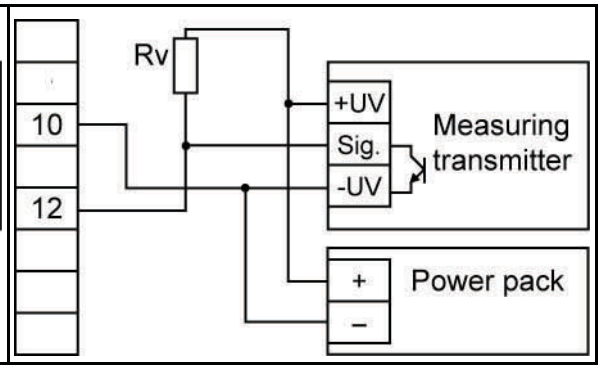

Connection of a transducer with separate supply and NPN-output with required external resistor

Connection note

R_V = 3 kOhm (at transducer supply = 12 V) or 7 kOhm (at 24 V); device configuration: Sens = TTL.

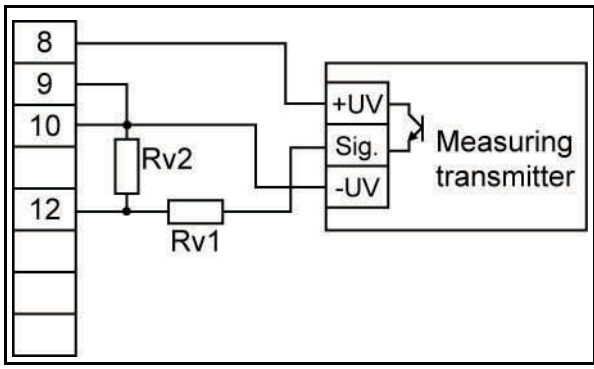

Connection of a transducer with integrated supply and PNP-output with external resistor wiring

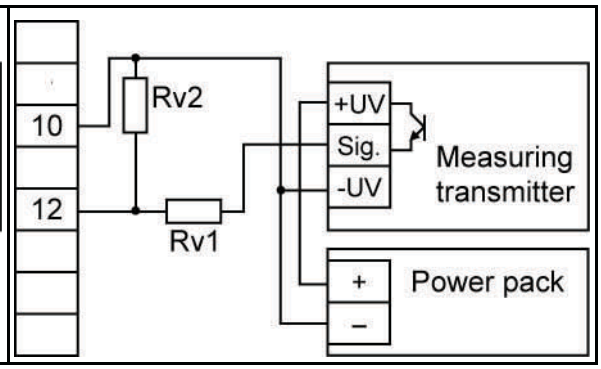

Connection of a transducer with separate supply and PNP-output with external resistor wiring

English

Connection note

R_V2 = 600 Ohm, R_V1 = 1,8 kOhm (at transducer supply = 12 V) or 4,2 kOhm (at 24 V); device configuration: Sens = TTL (R_V1 is used for current limitation and can be bridged, if necessary; the given value must not be exceeded).

Disturbences/interference voltages when using power modules

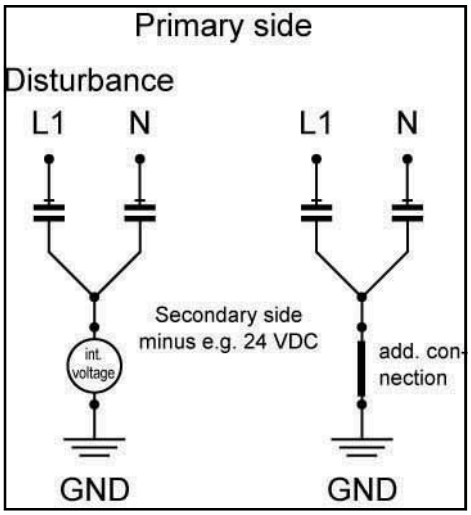

With the increasing use of power modules for voltage supply with 24 V SEG devices, there can sometimes be substantial disturbances, faulty measurements and breaks within measuring systems. In some cases, substantial faults or distances arise in relation to inadequate earthing. The measured values are influenced, and/or incorrect measurements reported.

The cause of this is usually unsatisfactory earthing management. Differing earth potentials within a meaurement system, with several sensors at different locations as well as a plotting device, also lead to such problems. The capacity of the sensors and of other devices against earth can also play a role.

The majority of the problems lie in the power packs themselves. In order to comply with the CE approval, the so-called X2 condensers are built-in for screening the Y circuit. This leads to a tension opposite earth of the Y foot, which amounts to about half of supply voltage to the secondary and/or low-voltage side, independent of the polarity of the primary winding.

Moreover, the base of the Y can still shift under the influence of disturbances (condensers are reactances and become, with an increase in frequency, more conductive/lower resistance). With minimal current leakage, additional DC voltages can develop within the power modules, (the size depending upon humidity and their circuit components). The internal construction and thus the level of interference differ strongly between manufacturers.

A clean, good earthing of the low-voltage minus, the sensors and the measuring instrument itself usually provides the best remedy.

4.3.4 *Connect switching output*

Hint

In order to avoid an inadvertent or faulty switch process, you should only connect the switching outputs after you have configured them.

Two variants of this equipment are equipped with a switching exit (relay) as standard.

Attention

Possible damage to the instrument!

Neither the maximum allowed voltage or the maximum switching current should be exceeded under any circumstances (even for short periods), as damage to the equipment can occur. Take special care to limit the subsequent voltage peaks when switching inductive loads on (e.g. relay, coils, etc.), by incorporating suitable preventive measures (e.g. an RC element).

Hint

If an ouput is configured as an alarm, then the “ON” condition is when no alarm is in service. If the alarm is in service, the relay then "opens".

4.3.5 *Several devices operating together*

At the 230V AC equipment, power supply, measuring input and transmitter supply are isolated.

With optional equipment (e.g. a DC supply), it can occur that this isolation is no longer completely intact (e.g. connection between supply voltage and GND). Make sure when wiring several such devices that no unwanted potential displacements can occur.

4.4 Configure measuring input

4.4.1 *General notes on using the Menu functions*

Attention

Change in function of the keys!

The key functions on the SEG 1060 have been changed, in comparison to the former version. Above all, this affects the confirmation of inputs. Please take note of the following information.

English

On the front of the equipment are the four keys, with which all configurations can be set:

- SET switches to next parameter; confirms input; stores new value; closes input
- ▲ selects a parameter to change: a short key stroke increases a value by steps; holding a key down continuously increases a value; if the maximum value is exceeded, the minimum value is shown
- ▼ selects a parameter to change: a short key stroke decreases a value by steps; holding a key down continuously decreases a value; if the minimum value is reached, the maximum value is shown
- ↵ cancels inputs, any changes are ignored and the original settings are restored: the menu display closes down

Key 5 (see section 3.2) can be found on the back of the equipment. This key must be pressed in order to select the input signal.

Hint

If no key is pressed for 10 seconds during the Parameter Menu, this function is then interrupted and the the original settings are restored. If no key is pressed for 60 seconds during the Main Menu, this function is then automatically closed down.

4.4.2 Select input signal

Hint

In order to avoid an inadvertent or faulty switch process, you should only connect the switching outputs after you have configured them.

1. Switch the instrument on.
2. Wait until the segment test is terminated – InP.
3. ▲ (key 2) + key 5 (rear side) > two seconds – FrEq.
4. ▲ ▼ select input signal (see table below).
5. SET – InP.

Possible input signals

Type of meas.	Input signal	Display	go to
Voltage signal	0 – 10 V	U	4.4.3
Current signal	4 – 20 mA 0 – 20 mA	I	4.4.3
Frequency	TTL-signal switch contact NPN, PNP	FrEq	4.4.4
Flow rate	PNP	FLoC	4.4.5
Number of revs	TTL-signal switch contact NPN, PNP	rPn	4.4.6

Please take note:

If a new measurement is set, all existing values are removed. These must be re-programmed when and as required.

Changing the Type of Measurement and other parameters can affect the Offset and Gradient correction values, as well as those of the Switch and Alarm settings. Check these parameters after a change in the Type of Measurement.

4.4.3 Configure voltage and current measurement

You have set meas. type U or I.

1. InP – SET – SEnS.
2. ▲ ▼ select input signal:
   10.00 = voltage measurement 0 – 10 V
   4-20 = current measurement 4 – 20 mA
   0-20 = current measurement 0 – 20 mA
3. SET – SEnS.
4. SET – dP.
5. ▲ ▼ set decimal point position.
6. SET – dP.
7. SET – dILo.
8. ▲ ▼ set display value that shall be displayed at input signal = 0 mA / 4 mA / 0 V.
9. SET – dILo.
10. SET – dIHI.

English

11. ▲ ▼ set display value that shall be displayed at input signal = 20 mA / 10 V.
12. SET – dIH1.
13. SET – L1.
14. ▲ ▼ select measurement range limitation:
    oFF = disabled*1
    onEr = active (error indication)*2
    onrG = active (display measurement range limitation)*3
15. SET – L1.
16. SET – FILt.
17. ▲ ▼ set filter (digital simulation of a low-pass filter): OFF or range 0.01 to 2.00 seconds.
18. SET – FILt.
19. SET – InP.
20, ↵ – leave configuration menu.

*1 exceeding the range limits is allowed up to the measurement border (see also following hint).

*2 the Measurement Range is strictly limited to the input signal values; if the range limits are exceeded, an Error Message is displayed.

*3 the Measurement Range is strictly limited to the input signal values; if the range limits are exceeded, the relevant range limit is displayed.

Hint

If the measurement limits (upper measurement range limit +10%) are exceeded, error message Err1 will always be displayed independant of the limit setting. If the measurement limits (lower measurement range - 10%) are fallen below, error message Err2 will be displayed at input signal „4 – 20 mA“ independant of the limit setting. Falling below 0 V or 0 mA will not be recognized.

4.4.4 *Configure frequency measuring*

You have set measurement type FrEq.

1. InP – SET – SEnS.
2. ▲ ▼ select input signal:
   ttL = TTL-signal
   nPn = switch contact, NPN*1
   PnP = switch contact, PNP*2
3. SET – SEnS.

4. SET – FrLo.
5. ▲ ▼ enter minimal frequency value of the measurement.
6. SET – FrLo.
7. SET – FrHI.
8. ▲ ▼ enter maximal frequency value of the measurement.
9. SET – FrHI.
10. SET – dP.
11. ▲ ▼ set position of decimal point.
12. SET – dP.
13. SET – dILo.
14. ▲ ▼ set display value that shall be displayed at the lower measured frequency border (FrLo).
15. SET – dILo.
16. SET – dIHI.
17. ▲ ▼ set display value that shall be displayed at the upper measured frequency border (FrHI).
18. SET – dIHI.
19. SET – LI.
20. ▲ ▼ select measurement range limitation:
    oFF = disabled*3
    onEr = active (error display)*4
    onrG = active (display measurement range limitation)*5
21. SET – LI.
22. SET – FILt.
23. ▲ ▼ set filter (digital simulation of a low-pass filter): OFF or range 0.01 to 2.00 seconds.
24. SET – FILt.
25. SET – InP.
26, ↵ – leave configuration menu.

*1 For the direct connection of a passive switch contact (e.g. pushbutton, relay) or a transducer with NPN-output; pull-up resistor is integrated in the instrument; **use bounce-free pushbuttons or relays!**

*2 For the direct connection of a transducer with PNP-ouput; pull-down resistor integrated in the instrument; an additional resistor is required with frequencies > 2kHz.

*3 Exceeding of measured frequency borders until the max. measuring range is allowed (see hint below).

*4 Measuring range limited to measured frequency borders; error message will be displayed when borders are exceeded/fallen below.

English

*5 Measuring range limited to measured frequency borders; corresponding border is displayed when borders are exceeded/fallen below.

Hint

Independant from the limit setting, error message Err 1 *will always be displayed when max. measured frequency border (10 kHz) is exceeded.*

4.4.5 *Configure flow rate measurement*

You have set measurement type FLoC (always PNP).*1

1. InP – SET – dP.
2. ▲ ▼ set decimal point position.
3. SET – dP.
4. SET – CAL.
5. ▲ ▼ set calibration value of flow rate sensor.*2
6. SET – CAL.
7. SET – FILt.
8. ▲ ▼ set filter (digital simulation of a low-pass filter) OFF or in the range 0.01 to 2.00 seconds.
9. SET – FILt.

*1 For the direct connection of a transducer with PNP-output; pull-down resistor integrated in the instrument; an additional resistor is required at frequencies > 2 kHz.

*2 You can find the calibration value in the calibration protocol of the low rate sensor.

4.4.6 *Configure speed measurement*

You have set measurement type rPn.

1. InP – SET – SEnS.
2. ▲ ▼ select input signal:
   ttL = TTL-signal
   nPn = switch contact, NPN*1
   PnP = switch contact, PNP*2
3. SET – SEnS.
4. SET – diu.
5. ▲ ▼ enter pre-divider; this is the number of impulses the transducer sends per revolution.
6. SET – diu.
7. SET – dP.

8. ▲ ▼ set decimal point position*3.
9. SET – dP.
10. SET – InP.
11, ↵ – leave configuration menu.

*1 For the direct connection of a passive switch contact (e.g. pushbutton, relay) or transducer with NPN-output; pull-up resistor integrated in the instrument; **use bounce-free pushbuttons or relays!**

*2 For the direct connection of a transducer with PNP-output; pull-down resistor integrated in the instrument.

*3 You can influence the resolution of the speed measurement by positioning the decimal point; the further left, the higher the resolution and the lower the maximal speed to be displayed.
Example: a motor runs with 50 revs/min. Without decimal point, the display shows: 0049 – 0050 – 0051, the maximal display value is 9,999 revs/min. With centered decimal point, the display shows: 49.99 – 50.00 – 50.01, the maximal display value is 99.99 revs/min.

4.5 Configure analog output

Hint

*The configuration of the measurement input can affect the configuration of the analog output. Therefore make sure that the analog output is configured **after** the measurement input.*

The analog output can be freely adjusted within the limits of the display range.

1. Switch the instrument on.
2. Wait until the segment test is terminated – 0.0.
3. ↵ (key 4) + key 5 (rear side) > two seconds – dAou.
4. ▲ ▼ select between 0 – 20 mA (0 – 10 V) and 4 – 20 mA.
5. SET – dAou.
6. SET – dALo.
7. ▲ ▼ enter display value where the instrument shall issue an output signal of 0 mA / 4 mA / 0 V.
8. SET – dALo.
9. SET – dAH1.
10. ▲ ▼ enter display value where the instrument shall issue an output signal of 20 mA / 10 V.
11. SET – dAH1.
12. SET – FILt.

English

13. ▲ ▼ set D/A-converter-filter (filter of the analog output): diSP 1 to 200*1.
14. SET – FILt.
15. SET – dAEr.
16. ▲ ▼ select desired output state in case of an error:
    oFF – inactive in case of error, output signal 0 mA / 0 V.
    on – active in case of error, output signal > 23 mA or > 10,5 V.
17. SET – dAEr.
18. SET – dAou.
19. ↵ – leave configuration menu.

*1 filter value='disp' means that the analogue output is derived directly from the display value. The filter is adjusted for the display but it also affects the analogue output. The accuracy of the analogue output depends on the calibration of the display reading. Filter value > 0 means that the analogue output is independent of the display filter. The results continue to be displayed, with the maximum possible accuracy, independent of the calibration of the display. At small values, the analogue output reacts faster to changes of the input signal. However, the analogue output signal becomes unsteady. At larger values, the analogue output signal is "smoothed" and thus steadier – the changes of signal may be delayed.

Important

If analog output 0 – 10 V has been selected, a 500 Ω resistor must be connected between pin 3 and 4.

4.6 Configure output function

Hint

*The configuration of the measurement input can affect the configuration of the output functions. Therefore make sure that the output, switching and alarm are configured **after** the measurement input.*

The analog output can be freely adjusted within the limits of the display range.

1. Switch the instrument on.
2. Wait until the segment test is terminated – 0.0.
3. SET (key 1) + key 5 (rear side) > two seconds – outP.

4. ▲ ▼ select output function:
   no – output switched off
   2P – 2-point regulator; continue with section 4.6.1
   ALF1 – min-/max-alarm; continue with section 4.6.2
5. SET – outP.

Hint

The setting of the switch and alarm points is shown in section 5.1.

4.6.1 Configure 2-point regulator

This description continues the selection of the output function (section 4.6 – 2P):

6. SET – Ion.
7. ▲ ▼ set value when regulator shall switch on.
8. SET – Ion.
9. SET – IoFF.
10. ▲ ▼ set value when regulator shall switch off.
11. SET – IoFF.
12. SET – IdEL.
13. ▲ ▼ value of the switch delay in seconds.
14. SET – IdEL.
15. SET – IErr.
16. ▲ ▼ set function in case of an error:
    oFF – inactive in case of an error
    on – active in case of an error
17. SET – IErr.
18. SET – outP.
19. ↵ – leave configuration menu.

4.6.2 Configure min-/max-alarm

This description continues the selection of the output function (section 4.6 – ALF1):

6. SET – ALH1.
7. ▲ ▼ set value when max-alarm shall be triggered
8. SET – ALH1.
9. SET – ALLo.
10. ▲ ▼ set value when min-alarm shall be triggered
11. SET – ALLo.

English

12. SET – AdEL.
13. ▲ ▼ set value of alarm delay in seconds; the alarm case must exist for the set time before an alarm is triggered.
14. SET – AdEL.
15. SET – outP.
16. ↵ – leave configuration menu.

5 Operation of the instrument

The following operational actions are described here:

- set switch points
- set alarm limits
- read and delete min-/max-value buffer
- read alarm indications
- meanings of error codes

5.1 Set switch points of output function 2-point regulator

When the output function „2-point regulator“ is set (see section 4.6), you do not need to enter the configuration to set the switch points:

1. SET > 2 seconds – Ion.
2. ▲ ▼ set value, when regulator shall switch on.
3. SET – Ion.
4. SET – IoFF.
5. ▲ ▼ set value, when regulator shall switch off.
6. SET – IoFF.
7. ↵ – leave configuration menu.

Application example

You have a heater plate and want to regulate it to a temperature of +120° C with a hysteresis of ±2° C. You have to set:

Ion = 120 (°C) / IoFF = 122 (°C)

5.2 Set alarm limits of output function alarm

When the output function „Alarm“ is set (see section 4.6), you do not need to enter the configuration to set the alarm limits:

1. SET > 2 seconds – AL H1.
2. ▲ ▼ set value when max-alarm shall be triggered
3. SET – AL H1.
4. SET – AL Lo.

5. ▲ ▼ set value when min-alarm shall be triggered
6. SET – ALLo.
7. SET – AdEL.
8. ▲ ▼ value of alarm delay in seconds; the alarm case must be present for the set time before the alarm is triggered.
9. SET – AdEL.
10. ↵ – leave configuration menu.

Application example

You want to supervise the temperature in a glasshouse with alarm limits 15° C and 50° C. You have to set:

ALH1 = 50 (°C) / ALLo = 15 (°C)

5.3 Min-/max-value buffer

The instrument buffers the minimal and maximal values automatically. You can display and delete them:

Display minimal value

▼ – Lo – 0007 (2 seconds)

Display maximal value

▼ – H1 – 2583 (2 seconds)

Delete min/max values

▲ ▼ > 2 seconds – CLr

5.4 Alarm display

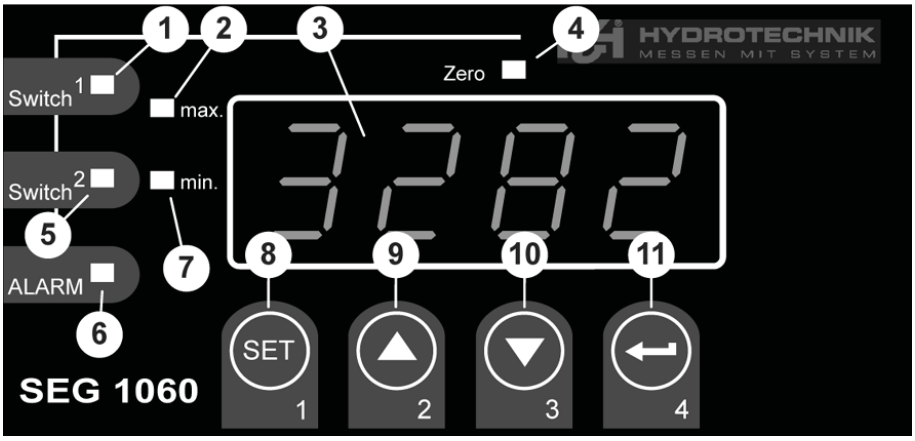

The lights 7 and 6 are illuminated during a minimal value alarm. The lights 2 and 6 are illuminated during a maximal value alarm.

English

The lights 2, 6 and 7 are illuminated during a system alarm or system error; additionally an error code is displayed (see section 5.5).

5.5 Meanings of error codes

Attention

Damage to the equipment and/or loss of validity of the guarantee possible!
Take special care to read and understand the following section concerning actions required when an Error Code is displayed. Inappropriate action can damage the equipment, and also lead to the loss of any warranty claims.

During a system error the lights 1 (alarm), 2 (min.) + 3 (max.) are illuminated and one of the following error codes will be shown:

Err 1: Measuring range exceeded

Possible cause of error:

- Input signal too high
- Sensor short-circuit (at 0/4 – 20 mA)
- Counter overflow

Possible remedy:

- Error message is resetted automatically, when input signal is back within allowed borders.
- Check sensor, transducer, frequency generator
- Check instrument configuration (e.g. input signal)
- Reset counter.

Err 2: Fall below measuring range

Possible cause of error:

- Input signal too small or negative
- Current < 4 mA
- Sensor break (at 4 – 20 mA)

Possible remedy:

- Error message is resetted automatically, when input signal is back within allowed borders.
- Check sensor, transducer, frequency generator
- Check instrument configuration (e.g. input signal)
- Reset counter

Err3: Display range exceeded

Possible cause of error:

- Wrong scaling

Possible remedy:

- Error message is resetted automatically, when input signal is < 9999 again
- Possibly the display range is too big cause of scaling and should be reduced (e.g. divide by 10)

Err4: Fall below display range

Possible cause of error:

- Wrong scaling

Mögliche Abhilfe:

- Error message will be resetted automatically, when display value is within allowed borders again.
- Possibly the display range is too small cause of scaling and should be enlarged (e.g. factor 10)

Err7: System error

Possible cause of error:

- Outside allowed operating temperature range.
- Instrument defective

Possible remedy:

- Maintain allowed operating temperature range
- Use different instrument

Er11: Value could not be calculated

Possible cause of error:

- Wrong scaling

Possible remedy:

- Check settings and input signal

Er12: Invalid value / wrong configuration

Possible cause of error:

- Wrong instrument configuration

Possible remedy:

- Check configuration

English

6 Appendix

6.1 Technical data of the universal measuring input

Type of meas.	Input signal	Meas. range	Remarks
Voltage signal	0 – 10 V	0 ... 10 V	Ri >= 200 kΩ
Current signal	4 – 20 mA	4 ... 20 mA	Ri = ~ 125 Ω
	0 – 20 mA	0 ... 20 mA	Ri = ~ 125 Ω
Frequency	TTL-signal	0 Hz ... 10 kHz	Signal low: 0,0 ~ 0,5 V Signal high: 2,7 ~ 24 V
	Switch contact NPN	0 Hz ... 3 kHz	internal pull-up resistor (~7 kΩ against +3,3V) will be switched on
	Switch contact PNP	0 Hz ... 1 kHz	internal pull-up resistor (~7 kΩ against GND) will be switched on
Volume flow	Switch contact PNP	0 Hz ... 2 kHz 0 Hz ... 10 kHz	internal pull-up resistor (~7 kΩ against GND) will be switched on resistor 4,7 kΩ betw. 10 and 12
Revolutions	TTL-signal (switch contact NPN, PNP)	0 ... 9999 U/min	engageable divider (1-1000), pulse frequency max. 600000 Imp/min*

* at switch contact corresponding to frequency input lower values

6.2 Technical data of the instrument

Display range	(for voltage, current, frequency measurement) -1999 ... 9999 digit, starting and end value and decimal point position freely selectable; recommended range: 2000 digit
Accuracy standard signal	< 0.2% FS ± 1 digit (at standard temperature)
Accuracy frequency	< 0.2% FS ± 1 digit (at standard temperature)
Accuracy comparison point	± 1°C ± 1 digit (at standard temperature)
Temperature drift	< 0.01% FS/K (at Pt100 – 0.1°C: < 0.015% FS/K)
Measurement rate	est. 100 meas./sec (at standard signal) est. 4 meas./sec (at frequency, rpm with f >= 4 Hz) or corresponding f (at f < 4 Hz)
Display	est. 13 mm high, 4-digit red LED display
Operation	with 4 keys and via interface
Transmitter supply	24 V_{DC} ±5%, 20 mA, isolated, or according information on product label

Outputs	1 potential-free relay output, or according information on product label 1 isolated analog output
Relay 1	2-way, switching capacity 10 A (ohmic load), 250 V_{AC}
Reaction time	<= 25 msec. at standard signal <= 0.5 sec. at temperature, frequency (f > 4 Hz)
Output functions	2-point, Min-/max-alarm
Switching points	free selectable
Analog output	0-20mA, 4-20mA, 0-10V according information on product label
Scaling	free selectable
Accuracy	0.2% FS
max. allowed load	1000 Ω
max. allowed burden	400 Ω
Power supply	230 VAC, 50/60 Hz, or 24 V_{DC} ± 5% according label
Standard temperature	25°C
Working temperature	-20°C to +50°C
Relative humidity	0 to 80% r.F. (not condensing)
Storage temperature	-30°C to +70°C
Casing dimensions	48 x 96 mm (front frame)
Installation depth	est. 115 mm (incl. screw-/clamp terminals)
Panel mounting	with holding clamp
Panel cut-out	H x W: 43.0 x 90.5 mm ± 0.5 mm
Electrical connection	with srew-/clamp terminals, line-cross section from 0.14 mm² to 1.5 mm²
Protection class	front IP54, with optional installation sealing IP65
EMC	EN61326 +A1 +A2 (App. A, class B), additional error: < 1% FS When connecting long cable lengths, suitable measures should be taken against impulse voltage.

6.3 Advice on Disposal

Please oberve all the relevant laws and regulations regarding the disposal of the packing materialsand electronic scrap.

If you wish us to dispose of the equipment, send it post-paid to Hydrotechnik. We will dispose of the equipment in an environmentally sound way.

English

7 Cleaning and Maintenance

7.1 Cleaning

Attention

Damage to the equipment is possible!
Switch the equipment off and disconnect it from the electricity supply BEFORE starting to clean. This prevents the risk of a short-circuit, and thereby possible damage to the equipment.

Attention

Damage to the equipment is possible!
Do NOT use any aggressive cleaning materials, solvents, benzin or similar chemicals when cleaning the equipment. This prevents the risk of damage to the casing and/or dulling the display.

- If the casing/housing becomes dirty, wipe it with soft, slightly damp cloth.
- Any ingrained dirt can be removed with a mild household cleaning product.

7.2 Maintenance

This instrument is maintenance-free. However, it is still essential to regularly re-calibrate it. If the instrument is in continuous use, we recommend re-calibration every 2 years.

Hydrotechnik has an efficient calibration laboratory. Please contact us at:

Hydrotechnik GmbH

Holzheimer Straße 94-96 • D-65549 Limburg
Tel.: +49 (0) 6431 – 4004 0 • Fax: +49 (0) 6431 – 45308
E-Mail: info@hydrotechnik.com • Internet: www.hydrotechnik.com

7.3 Repair

In the need of a repair, please contact our Customer Service Dept.. Please have the following information ready when you contact us. If you return the equipment, it would also help if this information was attached:

- Company
- Department
- Contact person
- Address
- Telephone and fax number
- E-Mail address
- Faulty part (equipment, sensor, cable, transformer)
- Description of fault (please leave the settings on your equipment exactly as they appeared at the time of the fault/error; and please briefly describe the use of equipment, the connection of the sensors, the equipment set-up etc.)

Customer Service Address

Please contact the Hydrotechnik Customer Service Dept. at the following address:

Hydrotechnik GmbH

Holzheimer Straße 94-96 • D-65549 Limburg
Tel.: +49 (0) 6431 – 4004 0 • Fax: +49 (0) 6431 – 45308
E-Mail: info@hydrotechnik.com • Internet: www.hydrotechnik.com

HYDROTECHNIK
MESSEN MIT SYSTEM

Hydrotechnik GmbH

Holzheimer Str. 94 – 96 • D-65549 Limburg
Tel.: +49 (0) 6431 40040 • Fax: +49 (0) 6431 45308
info@hydrotechnik.com • www.hydrotechnik.com