Dual Level Transmitter & Switch

Features

- Resolution: 5 mm
- Redundant measurement system
- Direct measurement
- Capable of measuring media of density > 0.6g/cm³ that is compatible with float material e.g. hydraulic oils, water, coolants even with foaming
- Total length (L0): 250 - 1000 mm
- Max. 2 switch points
- Analogue output 4 - 20 mA or 0 - 10 V
- Rotatable 320° display & electrical connection
- Menu navigation refers to VDMA standard

Applications

- Level control for
  - Hydraulics
  - Lubrication system
  - Cooling

Technical Data

Sensor element:	Reed switch
Materials: Wetted parts: Stem (Fitting, Tube): Float: Seals: Electronics housing:	 Stainless steel NBR foam FKM, EPDM or NBR Stainless steel, PBT
Operating elements:	3 easy-response pushbuttons
System of protection:	IP65/IP67
Protection class:	III
Electrical connection:	Plug M12 x 1 mm, 4-pin / 5-pin / 8-pin (depending on output code)
Process connection:	see order code
Float BN17 Density Medium: Depth of immersion:	 min. 0.60 g/cm³ 15 ± 2 mm (water), 19 ± 2 mm (oil 0.75) Ø17.8 mm, height 25 mm
Dimension:	110 x 41 mm (without plug connector and probe)
Weight:	approx. 350 g
Total lenght (L0):	250 mm, 370 mm, 410 mm, 1000 mm others on request
Accuracy	± 1 digit (without turbulence) including temperature influence and repeatability
Resolution:	5 mm
Max. pressure:	3 bar
Temperature range: Medium: Ambient: Storage:	 -25 °C... +80 °C -20 °C... +70 °C (1) -30 °C... + 80 °C
Power supply:	15... 32 V DC, reversed polarity protected (SELV, PELV)
Digital display:	4-digit 14-segment LED display, red, digit height 9 mm
Error display:	LED red and alphanumeric display
Power consumption:	approx. 50 mA (without load) approx. 80 mA (Output Code 6)

Relay output:	Rel. 1 normally closed, Rel. 2 normally open Load: max. 1A, max. 60V, max. 30 W	
Analog output: Current output: Load: Scanning rate: Voltage output: Rating: Adjustment range:	 4...20 mA max. RI = (Ub-12V) / 20 mA RI = 600 Ohm at Ub = 24 V DC 2 ms 0...10 V DC max. 10 mA 25 %... 100 % f. s.	
Units: Distance: Volume:	 %, mm, cm, m, inch, feet, liter, m³, gallon	
Transistor switching outputs PNP:		
Switching function:	Normally open/normally closed, standard / window mode and diagnosis function adjustable	
Adjustment range for switching point and hysteresis:	0 %... 125 % f. s.	
Switching frequency:	max. 100 Hz	
Load	max. 500 mA, short-circuit proof	
Delay	0.0 s ... 50 s adjustable	
Status display(s):	LED(s) red	
EMV	EN 61000-4-2 ESD	4 kV CD/8 kV AD
	EN 61000-4-3 HF radiated	10 V/m
	EN 61000-4-4 Burst	2 kV
	EN 61000-4-5-Surge	1/2 kV
	EN 61000-4-6 HF conducted	10 V
Shock resistance	DIN EN 60028-2-27	50 g (11 ms)
Vibrations resistance	DIN EN 60028-2-26	20 g (10...2000 Hz)
Approvals:	cULus[1] - E302981	

[1] Conditions of use with cULus: 60 °C max. ambient, power supply max. 28 V DC

Accessories

Order Number	Description
907-0357	Plug connector M12 x 1, 4-pin, with screw terminals, angled (IP65)
907-0185	Plug connector M12 x 1, 5-pin, with screw terminals, angled (IP65)
908-0361	Plug connector M12 x 1, 5-pin, with moulded cable (IP67), 2 m length
908-0544	Plug connector M12 x 1, 8-pin, with moulded cable (IP67), 2 m length

Dimensions (mm / *inch*)

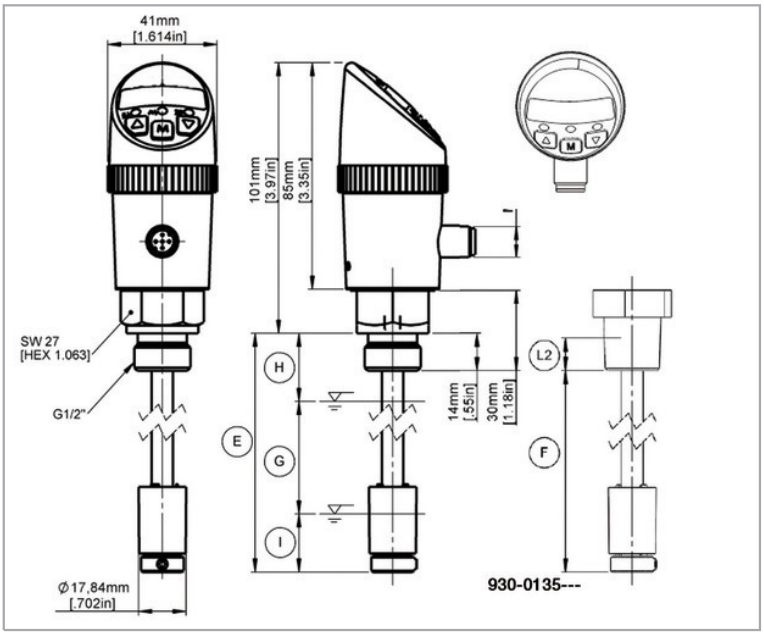

Fitting	Dead band	
	To (top)	Tu (bottom)
G1/2"	27 ±3 [1.06 ±0.12]	27 ±3 [1.06 ±0.12]
G3/4"	29 ±3 [1.14 ±0.12]	
G1"	31 ±3 [1.22 ±0.12]	
M20x1,5 mm	27 ±3 [1.06 ±0.12]	
1/2"NPT	13 ±3 [0.51 ±0.12]	
3/4"NPT		
1"NPT		
1¼"NPT		

Legend

E	L0 = total length for G&M threads
F	L0 = total length for NPT threads
L2	the effective length of 1/2" NPT, 3/4" NPT, 1"NPT and 11/4" NPT thread
G	LM = L0-(To+Tu)
H	To = dead band top
I	Tu = dead band bottom

Process connection

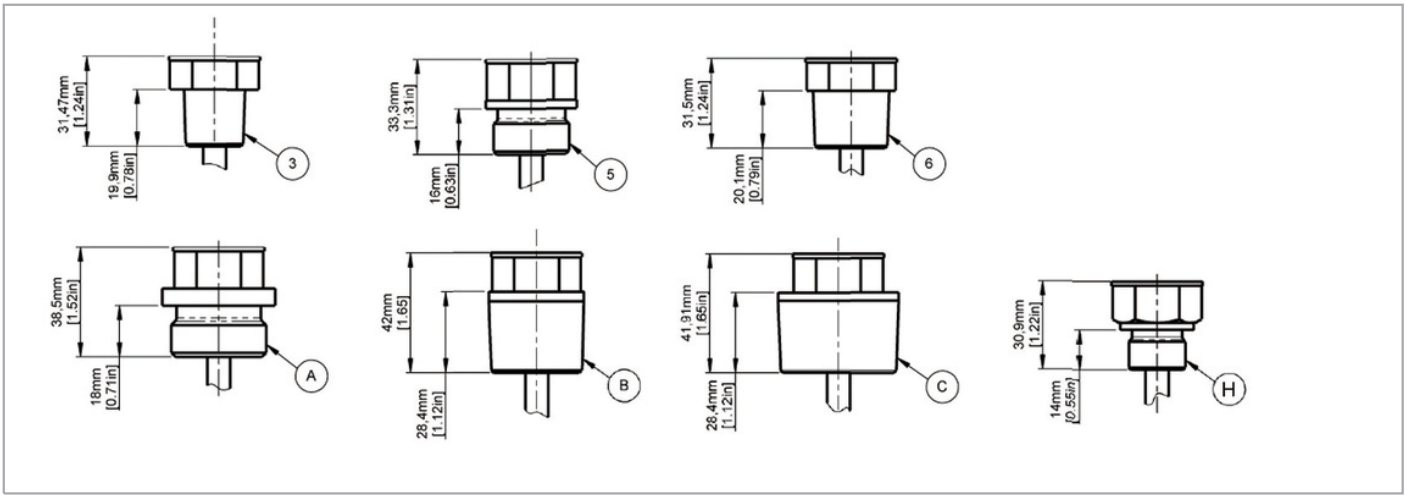

Electrical Connection

Pin	Signal Order Code 1	Signal Order Code 2, 3	Signal Order Code 4, 5	Signal Order Code 6	
1	+Ub	+Ub	+Ub	+Ub	
2	SP2	Signal	Signal	SP1a	NC
3	OV	0V	0V	SP1b	
4	SP1	SP1	SP1	0V	
5	-	-	SP2	SP2a	NO
6	-	-	-	SP2b	
7	-	-	-	-	
8	-	-	-	Housing	

Plug

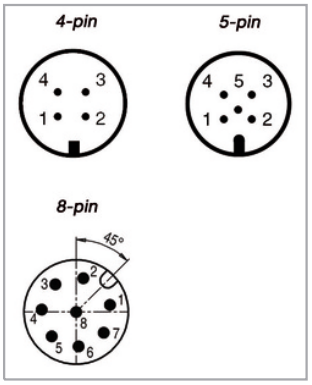

Order Code

HTLS3000						
HTLS3						Base Model
	Output					
	1					2 switch points
	2					4...20 mA and 1 switch points
	3					0...10 V DC and 1 switch points
	4					4...20 mA and 2 switch points
	5					0...10 V DC and 2 switch points
	6					2 relais switch points (1x NO SPST/1x NC SPST), no UL
		Process Connection				
		2				G1/2" male, with sealing (sealing code V, E or B)
		3				1/2"NPT male, without sealing (sealing code X)
		5				G3/4" male, with sealing (sealing code V, E or B)
		6				3/4"NPT male, without sealing (sealing code X)
		A				G1" male, with sealing (sealing code V, E or B)
		B				1"NPT male, without sealing (sealing code X)
		C				1¼"NPT male, without sealing (sealing code X)
		H				M20 x 1,5 mm male, with sealing (sealing code V, E or B)
			Sealing			
			X			without sealing (NPT process connection only)
			V			FKM (DIN 3869)
			E			EPDM (DIN 3869)
			B			NBR (DIN 3869)
				Electrical Connection		
				M		M12 x 1 mm (4,5 and 8 pin)
					Total Length L0	
					0 2 5 0 M	250 mm (process con. code 2, 5, A and H)
					0 3 7 0 M	370 mm (process con. code 2, 5, A and H)
					0 4 1 0 M	410 mm (process con. code 2, 5, A and H)
					1 0 0 0 M	1000 mm (process con. code 2, 5, A and H)
					0 9 . 8 Z	9.8 inch (process con. code 3, 6, B and C)
					1 4 . 6 Z	14.6 inch (process con. code 3, 6, B and C)
					1 6 . 1 Z	16.1 inch (process con. code 3, 6, B and C)
					3 9 . 4 Z	39.4 inch (process con. code 3,6, B and C)

Example:

HTLS3	**1**	2	**B**	M	**0 3 7 0 M**

Special design on request